EN

akytec

MK210-311

Digital I/O-Module

6 DI, 8 DO

User guide

MK210-311_2022_05_25233-1.21_EN
© All rights reserved
Subject to technical changes and misprints

CE

Contents

1. Introduction ... 3

1.1 Terms and abbreviations ... 3

1.2 Symbols and key words ... 3

1.3 Intended use ... 3

1.4 Limitation of liability ... 4

1.5 Safety ... 4

2. Overview ... 5

2.1 Basic features ... 5

2.2 Design and indication ... 5

3. Specifications ... 7

3.1 Specification tables ... 7

3.2 Operating conditions ... 8

4. Configuration and operation ... 9

4.1 Connection with akYtecToolPro ... 9

4.1.1 Connection over USB ... 9

4.1.2 Connection over Ethernet ... 10

4.2 Real-time clock ... 10

4.3 Battery ... 11

4.4 Ethernet ... 11

4.4.1 Network parameters setting using service button ... 12

4.5 Modbus Slave ... 12

4.6 Device status ... 12

4.7 Data logging ... 13

4.8 Digital inputs ... 13

4.8.1 Debounce filter ... 14

4.8.2 Low frequency counter ... 14

4.9 Digital outputs ... 14

4.9.1 Output safe state ... 15

4.9.2 Output diagnostic ... 15

4.10 NTP protocol ... 16

4.11 MQTT protocol ... 16

4.11.1 Basics ... 16

4.11.2 Implementation ... 16

4.12 SNMP protocol ... 18

4.12.1 Basics ... 18

4.12.2 Implementation ... 18

4.13 Password ... 18

5. Installation **20**
5.1 Mounting 20
5.2 Wiring 20
5.2.1 General information 21
5.2.2 Digital inputs 21
5.2.3 Digital outputs 22
5.2.4 Ethernet 22
6. Factory settings restoration **24**
7. Maintenance **25**
8. Transportation and storage **26**
9. Scope of delivery **27**
Appendix A. Dimensions **28**
Appendix B. Galvanic isolation **29**
Appendix C. Battery replacement **30**
Appendix D. Modbus application **31**

1. Introduction

1.1 Terms and abbreviations

akYtecToolPro – configuration software

Modbus – application layer messaging protocol for client/server communication between devices connected on different types of buses or networks, originally published by Modicon (now Schneider Electric), currently supported by an independent organization Modbus-IDA (https://modbus.org/)

NTP – Network Time Protocol

MQTT – Message Queuing Telemetry Transport, publish-subscribe network protocol to transport messages between devices

SNMP – Simple Network Management Protocol, an Internet Standard protocol for collecting and organizing information about managed devices on IP networks and for modifying that information to change device behavior

PWM – pulse-width modulation

RTC – real-time clock

UTC – Coordinated Universal Time, world-wide primary time standard

1.2 Symbols and key words

WARNING
*WARNING indicates a potentially dangerous situation that could result in **death or serious injuries**.*

CAUTION
*CAUTION indicates a potentially dangerous situation that could result in **minor injuries**.*

NOTICE
*NOTICE indicates a potentially dangerous situation that could result in **damage to property**.*

NOTE
NOTE indicates helpful tips and recommendations, as well as information for efficient and trouble-free operation.

1.3 Intended use

The device has been designed and built solely for the intended use described here, and may only be used accordingly. The technical specifications contained in this document must be observed.

The device may be operated only in properly installed condition.

Improper use

Any other use is considered improper. Especially to note:

- The device may not be used for medical appliances applied to maintain human life or health, its control or other effect on them.
- The device may not be used in explosive environment.
- The device may not be used in atmosphere in which there are chemically active substances.

1.4 Limitation of liability

Our company does not bear any responsibility with respect to breakdowns or damages caused by using the product in a manner other than described in the Manual or in violation of the current regulations and technical standards.

1.5 Safety

WARNING
Ensure the mains voltage matches the voltage marked on the nameplate.
Ensure the device is provided with its own power supply line and electric fuse.

WARNING
The device terminals may be under a dangerous voltage. De-energize the device before working on it.
Switch on the power supply only after completing all works on the device.

NOTICE
Supply voltage may not exceed 48 V. Higher voltage can damage the device.
If the supply voltage is lower than 10 V DC, the device cannot operate properly but will not be damaged.

NOTICE
If the device is brought from a cold to a warm environment, condensation may form inside the device. To avoid damage to the device, keep the device in the warm environment for at least 1 hour before powering on.

2. Overview

MK210-311 is an extension module with 6 digital inputs and 8 relay outputs.

The module operates as a slave in Ethernet network with Modbus TCP protocol.

The device is intended for use in industrial automation for creation of decentralized control systems.

The module can be configured with the configuration software akYtecToolPro (free) over USB or Ethernet interface (Sect. 4). The software can be downloaded from our homepage *akYtec.de*.

2.1 Basic features

- 6 active digital inputs with counter function (Sect. 4.8)
- 8 relay outputs with pulse-width modulation option (Sect. 4.9)
- Device and I/O status indicators (Sect. 2.2)
- Open load and relay malfunction detection (Sect. 4.9.2)
- Dual Ethernet (Sect. 4.4, 5.2.4)
- Slave in Modbus network over Ethernet (Sect. 4.5)
- USB configuration interface (Sect. 4.1.1)
- Real-time clock (Sect. 4.2)
- Device diagnostic (Sect. 4.6)
- Data logging and archiving (Sect. 4.7)
- Error indication (Table 2.1)
- DIN rail or wall mounting (Sect. 5.1)

2.2 Design and indication

The device is designed in a plastic case for DIN rail or wall mounting (Sect. 5.1).

Plug-in terminal blocks enable quick and easy replacement of the device.

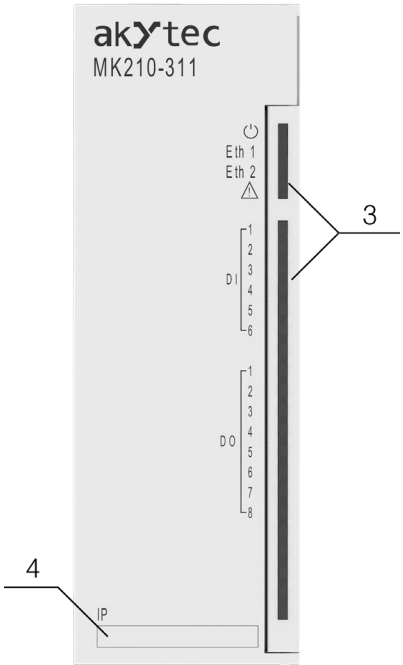

Fig. 2.1. Front view (closed cover)

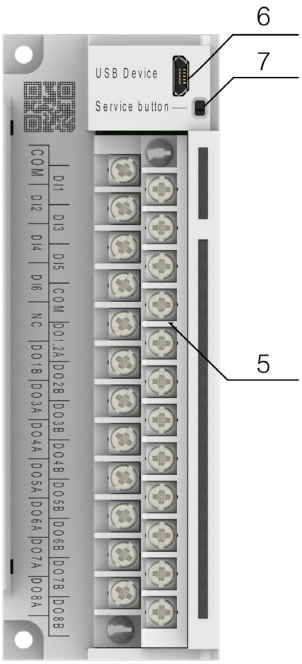

Fig. 2.2. Front view (open cover)

On the device top:

1. Power supply terminals
2. 2 Ethernet connectors (Sect. 4.4, 5.2.4)

On the front cover:

3. LED indicators (Tab. 2.1)
4. Recess for a sticker with IP address

Under the front cover:

5. I/O plug-in terminal block (Sect. 5.2)
6. microUSB programming connector (Sect. 4.1.1)
7. Service button

The service button can be used for the following functions:

- IP address assignment (Sect. 4.4.1)
- Factory settings restoration (Sect. 6)
- Firmware update (Sect. 7)

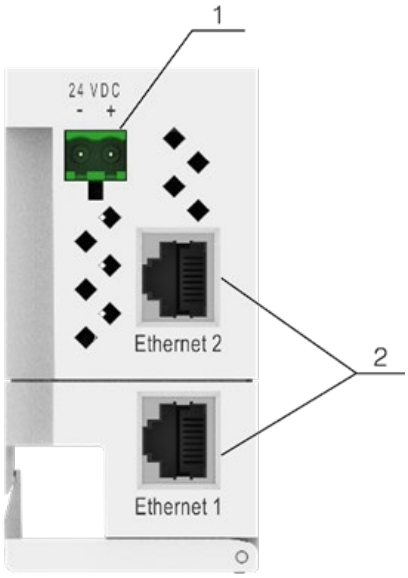

Fig. 2.3. Top view

Table 2.1. LEDs

LED	Color	State	Description
⏻	green	Off	Power off
		On	Power on
Eth 1	green	Off	Not connected
		Flashing	Data transfer over Ethernet 1 interface
Eth 2	green	Off	Not connected
		Flashing	Data transfer over Ethernet 2 interface
⚠	red	Off	No errors
		On	Program / configuration error
		Flashing (0.2 s / 2 s period)	Low battery (Sect. 4.3, App. C)
		Flashing (0.1 s / 0.5 s period)	No requests from master. Safe state activated.
		Flashing (0.9 s / 1 s period)	Hardware peripherals error (Flash, RTC, Ethernet Switch)
Input LEDs (6)	green	Off	LOW on the input
		On	HIGH on the input
Output LEDs (8)	green	Off	Output relay off
		On	Output relay on
	red	On	Fault status (Sect. 4.9.2)

3. Specifications

3.1 Specification tables

Table 3.1 General specification

Electrical		
Power supply		24 (10…48) V DC
Power consumption, max.		6 W at 24 V DC
Polarity protection		yes
Appliance class		II
Interfaces		
Data transfer		Double Ethernet 10/100 Mbps
Protocols		Modbus TCP MQTT SNMP NTP
Configuration interfaces		USB 2.0 (micro-USB) Ethernet 10/100 Mbps
Digital inputs		
Inputs		6
Input signal		Switch contact (potential free) NPN transistor
Functions		Pulse counter Debounce filter (optional)
Pulse length, min.		1 ms (f ≤ 400 Hz)
Input lines (loop) resistance, min.		100 Ω
Digital outputs		
Outputs		8
Output type		Relay, NO
Control		On-Off or PWM
Switching capacity	AC	5 A, 250 VAC, resistive load
	DC	3 A, 30 VDC
Switching current, min.		10 mA at 5 VDC
Switching time		15 ms
PWM frequency, max.		1 Hz with 0.05 duty cycle
PWM pulse length, min.		50 ms
Optional functions		Safe state Output diagnostic
Service life, electrical	3 A, 30 VDC	35,000 switching cycles
	5 A, 250 VAC	50,000 switching cycles
Service life, mechanical		5,000,000 switching cycles
Flash memory (log file storage)		
File size, max.		2 kB
Number of files, max.		1000
Logging interval, min.		10 s
Real-time clock		
Accuracy		±3 s/day at 25°C ±10 s/day at -40°C
Backup battery		CR2032
Mechanical		
Dimensions		42 x 124 x 83 mm
Weight		approx. 260 g

3.2 Operating conditions

The module is designed for natural convection cooling. It should be considered when choosing the installation site.

The following environment conditions must be observed:

- clean, dry and controlled environment, low dust level
- closed non-hazardous areas, free of corrosive or flammable gases

Table 3.2 Operating conditions

Condition	Permissible range
Ambient temperature	-40…+55°C
Transportation and storage	-40…+55°C
Relative humidity	up to 95 % (at +35°C, non-condensing)
Altitude	up to 2000 m ASL
IP code	IP20
Vibration / shock resistance	conforms to IEC 61131-2
EMC emission / immunity	conforms to IEC 61131-2

4. Configuration and operation

The device parameters can be set with akYtecToolPro or by command from a network Master.

The complete parameter list is presented in Appendix D. You can also read it out from the device using the toolbar item ***Parameter list*** in akYtecToolPro.

The modules of Mx210 series have the following parameter groups:

- Real-time clock (Sect. 4.2)
- Battery (Sect. 4.3)
- Network (Sect. 4.4)
- Modbus slave (Sect. 4.5)
- Device status (Sect. 4.6)
- Data logging (Sect. 4.7)
- I/O groups, depending on model (Sect. 4.8, 4.9)

4.1 Connection with akYtecToolPro

The connection with akYtecToolPro running on the PC can be established over the interfaces USB (Sect. 4.1.1) or Ethernet (Sect. 4.1.2).

For configuration over Ethernet, the device must be powered on. When being configured over USB, the device is powered by USB and the main power supply is not required.

4.1.1 Connection over USB

NOTICE
The device must be powered off before being connecting to PC over USB.

NOTICE
When the device is powered over USB, the inputs, outputs and the Ethernet interfaces are disabled. If you need full control over the device, you have to connect the main power, but you must observe the following:
There is no galvanic isolation between digital inputs and USB interface. Equipment connected to these circuits must have the same ground potential or be galvanically isolated to avoid damage to the device.

To configure the module over USB:

1. Connect the microUSB programming connector of the device (Fig. 2.2. Pos. 6) to PC over a USB-to-microUSB connection cable (not included).
2. Start akYtecToolPro.
3. In a new project, click the toolbar item ***Add devices***.
4. In an opened dialog, select the interface ***STMicroelectronics Virtual COM Port.***
5. Select the protocol ***akYtec Autodetection Protocol.***
6. Select ***Find device.***
7. Enter the device address (factory setting: 1) and click ***Search.***
8. If the correct device is found, select it and click the button ***Add devices*** to add the device to the project.
9. If the device is password protected, enter the correct password.

If you forgot the password, restore the factory settings (Sect. 6).

4.1.2 Connection over Ethernet

To configure the module over Ethernet:

1. Connect the Ethernet connector of the device to PC over the Ethernet connection cable (not included).
2. Connect the power cable to the removable 2-terminal block and plug it into the device.
3. Power on the device.
4. Start akYtecToolPro.
5. Click the toolbar item ***Add devices***.
6. In the opened dialog select the interface ***Ethernet.***
7. Select ***Find device.***
8. Enter the IP address (Factory setting: 192.168.1.99) and click ***Search.***
9. If the correct device is found, select it and click the button ***Add devices*** to add the device to the project.
10. If the device is password protected, enter the correct password.

If you forgot the password, restore the factory settings (Sect. 6).

4.2 Real-time clock

The module has a real-time clock (RTC) with a back-up battery (Sect. 4.3). The RTC time is counted as UTC in seconds, starting from 01/01/2000, 00:00.

To set the time, click the toolbar icon ***Real-time clock*** (Fig. 4.1).

Use the button ***Synchronize with PC*** to synchronize the RTC with the PC clock.

Select your time zone from the drop-down list below. You can also set the time zone in the range -720...+840 min. with a 60 min. step in the parameter group ***Real-time clock***.

Use the button ***Save*** to save the parameters in the device memory.

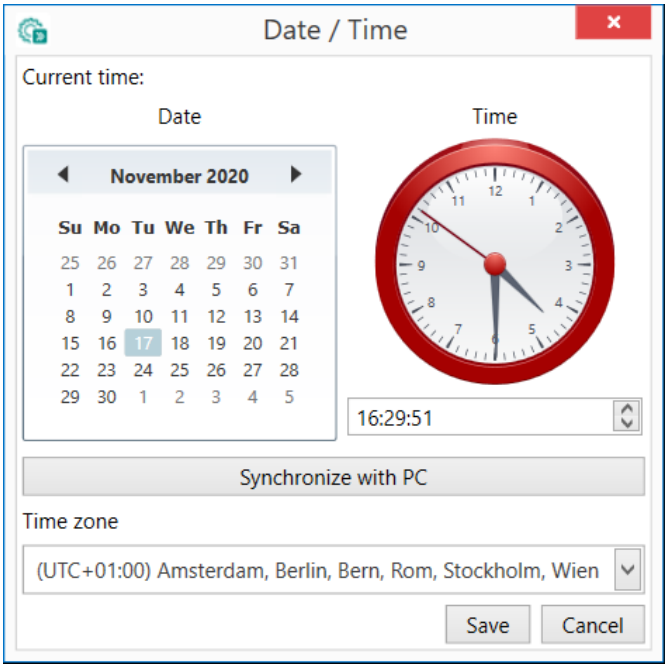

Fig. 4.1. Real-time clock parameters

The RTC is used for calculation of measuring timestamps (Sect. 4.8.5) and of ***Time (ms)*** parameter.

Time (ms) is a cyclic time in milliseconds that starts with turning on and stops with turning off of the device. It is reset to zero at the end of cycle (4294967295 ms). The parameter is used for device diagnostic purposes.

To set the RTC time over Modbus network, proceed as follows:

1. Write the new time in the parameter ***New time.***

2. Set the parameter ***Apply new time*** = 1 and hold the value for at least 1 second.
3. Set the parameter ***Apply new time*** = 0 and hold the value for at least 1 second.

The time value cannot be changed more than once per second.

4.3 Battery

The RTC is powered by the supply voltage. When the device is powered off, RTC is powered by a replaceable battery of type CR2032.

A fully charged battery can power the RTC for 5 years. At the temperatures near the permissible limits (Tab. 3.2), the battery life time is reduced.

The parameter ***Voltage*** in the group ***Battery*** shows the battery voltage in mV.

The battery status is updated each time after powering on and then every 12 hours.

The battery should be replaced if at least one of the following events has occurred:

- LED indicator ⚠ lights up for 0.2 s with a period of 2 s, which means that $U_B \leq 2$ V and the battery has to be replaced as soon as possible, but the RTC can still work for about 2 weeks without power supply.
- The battery was last time replaced 6 years ago.

For battery replacement, see App. C.

NOTE
If the battery voltage is less than 1.6 V, the configuration parameters are written to the battery-backed RAM and then transferred to the flash memory. The recording interval depends on the load of the module processor (at least 2 minutes).
Since the number of erase cycles of the flash memory is limited, it is not recommended to record the configuration parameters cyclically when the battery is low.

4.4 Ethernet

To configure the Ethernet interface, open the node ***Network > Ethernet*** in the parameter tree.

Table 4.1. Ethernet parameters

Parameter	Description	Default value	Access
IP address	IPv4 Internet Protocol address	192.168.1.99	R
Subnet mask	IP address recognition area in the subnet	255.255.255.0	R
Gateway	IP address of the gateway	192.168.1.1	R
DNS server 1	Primary DNS server	77.88.8.8	RW
DNS server 2	Secondary DNS server	8.88.8.8	RW
New IP address	Enter new value	–	RW
New subnet mask	Enter new value	–	RW
New gateway	Enter new value	–	RW
DHCP	***On*** / ***Off*** / ***Service button***	***Service button***	RW

The Ethernet parameters can be set using:

- only main toolbar
- service button on the device (recommended if you need to configure several devices at once) (Sect. 4.4.1.)

To change Ethernet parameters using the main toolbar:

1. Enter new values for the parameters ***New IP address***, ***New subnet mask*** and ***New gateway***
2. Set the parameter ***DHCP*** to ***Off***

3. Click the toolbar item ***Write parameters***
4. Click the toolbar item ***Restart device***
5. If you want to check the new parameters or continue configuring the device, you must add it again to the project with the new network parameters.

If a dynamic IP address is required (e.g. to use a cloud service), set ***DHCP*** to ***On***.

4.4.1 Network parameters setting using service button

If you need to assign IP addresses for several modules, it is more comfortable to use service buttons on devices (Fig. 2.2. Pos. 7), previously having all the modules connected to the PC over Ethernet.

To change the Ethernet parameters using service buttons:

1. Connect all modules in series to the PC over Dual Ethernet ports (Fig. 2.3. Pos. 2)
2. Power on the modules
3. Start akYtecToolPro
4. Set the parameter ***DHCP*** to ***Service button*** on all modules
5. Click the toolbar item ***IP addresses***
6. Set the IP address for the first module from the group
7. Press the service buttons on the modules sequentially, checking the result in the dialog box, where will be indicated on which module the button was pressed. The specified static IP address and other network parameters, if any have been changed, are assigned to this module. The address is automatically incremented by 1 for each subsequent device.

Only Ethernet parameters will be changed, other parameters will not be affected.

If you forgot the IP address of the device, restore the factory settings (Sect. 6.).

4.5 Modbus Slave

The module can operate in Modbus TCP network as a slave, using the port 502 and the standard address 1. The address can be changed in the group ***Modbus Slave*** (Tab. 4.2).

The device can handle maximum 4 Modbus TCP connections.

For details on Modbus working see Appendix D.

For Modbus protocol specifications see *Modbus specifications*.

Table 4.2. Modbus Slave parameters

Parameter	Description	Range	Default value	Access
Slave address	Device address in a Modbus network	1...254	1	RW
Safe state timeout	Output safe state activation delay after communication interruption (Sect. 4.9.1)	0…60 s	30	RW

4.6 Device status

The parameters of the device status are in the group ***Device status*** in the parameter tree.

Table 4.3. Device status parameters

Parameter	Description	Range	Default value	Access
Update period	Status update time interval	1…60 s	5	RW
Status	32-bit status code	0…4294967295	–	R

4.7 Data logging

An archive is saved as a set of encrypted log files. A log file consists of a set of records separated by line break characters (0x0A0D). Each record corresponds to one parameter and consists of fields separated by semicolon. The format of the record is described in Tab. 4.4.

Table 4.4. Record format

Field	Type	Size	Comment
Time	binary	4 Byte	In seconds, beginning from 01/01/2000, 00:00 (UTC+0)
Separator	string	1 Byte	Semicolon (;)
UID (parameter ID)	string	8 Byte	String of HEX characters with leading zeros
Separator	string	1 Byte	Semicolon (;)
Parameter value	string	parameter depending	String of HEX characters with leading zeros
Separator	string	1 Byte	Semicolon (;)
Parameter status	binary	1 Byte	1 – value correct 0 – value incorrect, further processing not recommended
New line	binary	2 Byte	0x0A0D

Log files are stored in a built-in flash memory, formatted as a file system with encryption. For flash memory specifications see section “Flash memory” in Table 3.1.

If an archive overflows, the new entry will overwrite the oldest one in the archive.

The archiving parameters are described in Tab. 4.5.

To view all logged parameters, use the toolbar item ***Device information*** in akYtecToolPro.

The archive can be read with via Modbus TCP using function 20 (Tab. D.3). This function allows reading one or several records from one or several files in one request. For details on function usage see *Modbus specifications*.

The file number in the Modbus request should be calculated as file ID + 4096. File indexing starts with zero. The parameter ***Last log file ID*** contains the ID of the archive file to which the data was last written.

The time zone is not contained in the file but can be read from the parameter ***Time zone*** (Tab. D.1).

Table 4.5. Archiving parameters

Parameter	Description	Range	Default value	Access
Logging interval	Time interval with which the values of the selected parameters will be recorded	10…3600 s	30	RW
Number of files	Maximum number of archive files	10…300	100	RW
File size	Log file size in Bytes	200…2048	2048	RW
Last log file ID	ID of the last written file	0…65535	–	R

4.8 Digital inputs

To configure the digital inputs, open the ***Digital inputs*** group in the parameter tree.

Table 4.6. Input parameters

Parameter	Description	Range	Default value	Access
Single				
Debounce filter	Contact bounce suppression filter (Sect. 4.8.1)	***On*** / ***Off***	***Off***	RW
Pulse counter value	Counter value (Sect. 4.8.2)	0…4294967295	-	R
Reset value	Force counter reset	***On*** / ***Off***	***Off***	RW
Group				
Input bitmask	Input state bitmask	0…63	-	R

Digital input detects the logical level of the input signal (0/1). The states of the inputs are stored in a bitmask. The least significant bit of the mask corresponds to the input DI1.

4.8.1 Debounce filter

Debounce filter can be activated for each input by setting the parameter ***Debounce filter*** to ***On***. The filter fixed time is 25 ms.

It is not recommended to use the contact bounce suppression for input signals with a frequency above 20 Hz and a duty cycle of 0.5 or less because a useful signal can be missed.

4.8.2 Low frequency counter

Each input has a low frequency 32-bit pulse counter.

The counter can be used for the pulses with the following parameters:

- frequency ≤ 400 Hz
- pulse length ≥ 1 ms

Pulses of higher frequency or shorter length will be ignored.

The counter is triggered on rising edge.

The counter resets to zero on overflow.

Forced counter reset via Modbus:

1. parameter ***Reset value*** = 0 (***On***), the counter will be reset within 10 ms
2. pause for at least 15 ms
3. parameter ***Reset value*** = 1 (***Off***)

The counter values are stored in a non-volatile memory and are retained after device restart.

4.9 Digital outputs

To configure the digital outputs, open the ***Digital outputs*** group in the parameter tree.

Table 4.7. Output parameters

Parameter	Description	Range	Default value	Access
Single				
Control mode	Output control mode	***On-Off*** / ***PWM***	***On-Off***	RW
PWM period	Period in PWM mode	1000…60000 ms	1000	RW
PWM duty cycle	Duty cycle in PWM mode	0…1000 ‰	50	RW
Safe state	Output state after communication loss (Sect. 4.9.1)	0…1000 ‰	0	RW
Output diagnostic	Output diagnostic option (Sect. 4.9.2)	***On*** / ***Off***	***Off***	RW
Group				
Output bitmask	Output state bitmask	0…255	-	R
New output bitmask	New output state bitmask	0…255	0	RW
Diagnostic bitmask	Output diagnostic bitmask	0…255	-	R

There are two modes of output control:

- On-off
- Pulse-width modulation (PWM)

The PWM control is determined by the parameters ***PWM period*** and ***PWM duty cycle***.

Output group parameters are bitmasks. The least significant bit of the mask corresponds to the input DO1.

To change the output state, set the corresponding bit in the bitmask of the parameter ***New output bitmask***.

4.9.1 Output safe state

Safe state is the PWM duty cycle in ‰, applied to the PWM output if the network data exchange is interrupted i.e. there is no request from the master within the time specified in the parameter ***Safe state timeout*** (Modbus Slave group, Sect. 4.5).

Safe state can be specified in the parameter ***Safe state*** for each output.

Safe state is inactive if the parameter ***Safe state timeout*** is set to 0.

Safe state has no effect in On-off mode.

In the safe state condition, the following applies:

- The LED ⚠ lights red until a new master request is received.
- The output remains in the safe state until a command from the master for state change is received.

If the module is powered on with the ***Safe state*** > 0, the outputs are set to the last saved states (before powering off), until new values of the PWM duty cycles are received from the master.

If the module is powered on with the ***Safe state*** = 0, the outputs are off until new values of the PWM duty cycles are received from the master.

4.9.2 Output diagnostic

Diagnostic of the relay contacts closure and the output load can be enabled for each output in the parameter ***Output diagnostic***.

The diagnostic result can be read out in the ***Diagnostic bitmask*** parameter. The parameter is a bitmask that contains the results of the output diagnosis. The least significant bit of the mask corresponds to the input DO1. If an output is in the error state, the output LED lights up red and the corresponding bit in the bitmask is set to 1.

For diagnostic purposes, a 200 kΩ resistor R_D is connected in parallel with the normally open relay contacts (Fig. 4.2).

- When the relay is off and the current I_D flows through the resistor, the output works normally. The absence of a voltage drop across the resistor indicates an open load or relay welding, the fault status gets active.
- When the relay is on and there is no current I_D through the resistor, the output works normally. If the current flows, the relay or its contacts are damaged, the fault status gets active.

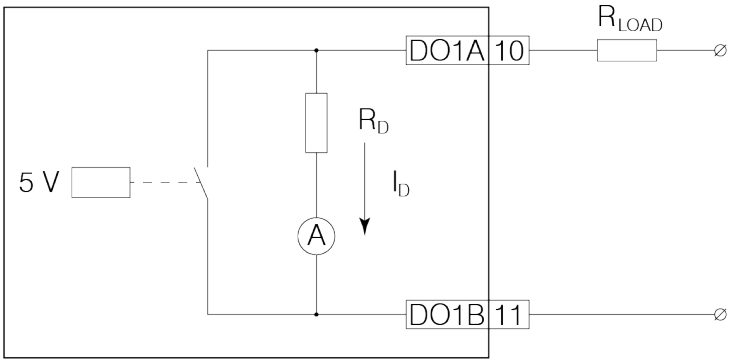

Fig. 4.2. Output diagnostic

When the output diagnostic is disabled, the resistor R_D is not electrically disconnected from the output circuit, and small current flows through the load.

The diagnostic works under the following conditions:

- DC: supply voltage at least 18 V DC with a load resistance of maximum 10 kΩ
- AC: supply voltage at least 90 V AC with a load resistance of maximum 20 kΩ.

4.10 NTP protocol

The module supports the synchronization of the RTC with an NTP server v4. Open the ***NTP*** group to configure NTP parameters.

Table 4.8. NTP parameters

Parameter	Description	Range	Default value	Access
Enable	Enable NTP connection	***On*** / ***Off***	***Off***	RW
NTP server pool	IP or URL of NTP pool. If the server is located in an external network, check the correct values for the parameters ***Gateway*** and ***DNS*** (***Network*** group)	-	pool.ntp.org	RW
NTP server 1	IP or URL of the primary NTP server	-	192.168.1.1	RW
NTP server 2	IP or URL of the secondary NTP server		192.168.1.2	RW
Synchronization period	Time synchronization period in seconds. Ensure the set value is not less than the minimum value for the selected NTP server.	5…65535 s	5	RW
Status	Server connection status	-	-	R

All specified NTP servers (including servers from the pool) have the same polling priority.

For more information see document: NTP_MQTT_SNMP_protocols.

4.11 MQTT protocol

4.11.1 Basics

The MQTT protocol defines two types of network entities: a message ***broker*** and a number of clients. Broker is a server that receives all messages from the clients and then routes the messages to the appropriate destination clients. Client can be ***publisher*** or / and ***subscriber***.

Published messages are organized in a hierarchy of ***topics***. When a publisher has a new data to distribute, it sends a message with the data under the particular topic to the connected broker. The broker distributes the message to any clients that have subscribed to that topic.

A topic is a UTF-8 encoded character string that the broker uses to filter messages for each connected client. The topic consists of one or more topic ***levels***. Each topic level is separated by a forward slash (topic level separator).

When a client subscribes to a topic, it can subscribe to the exact topic of a published message or it can use wildcards to subscribe to multiple topics simultaneously. There are two kinds of wildcard symbols: ***single-level*** (+) and ***multi-level*** (#) (see Example 1).

4.11.2 Implementation

The module supports the MQTT protocol (v3.1.1) and can be used as client. It can publish information about the status of its inputs and outputs and can be subscribed to topics which control its outputs.

To configure the MQTT parameters, open the ***MQTT*** group in the parameter tree.

NOTE
When using the MQTT protocol, it is recommended to set the parameter "Safe state timeout" ("Modbus Slave" group) to 0, since writing is usually event-driven and not cyclic in this case.

Table 4.9. MQTT parameters

Parameter	Description	Range	Default value	Access
Presence detection. Enable	If ***On***, the module publishes the message "Online" to the topic specified in the parameter ***Topic name*** after switching on. If no messages are received from the module, the broker publishes an "Offline" message in this topic.	***On*** / ***Off***	***Off***	RW
Presence detection. Topic name	Topic name used for presence detection.	-	***MQTT-status***	RW
Connect to broker	Set to ***On*** to establish connection	***On*** / ***Off***	***Off***	RW
User name	Used for device authentication on the broker side. Authentication is not used if the values are not specified.	-	-	RW
Password		-	-	RW
Device name	Device name used in the topic name (see Example 1)	-	-	RW
Broker address	Broker IP or URL. If the broker is located in an external network, check the correct values for the parameters ***Gateway*** and ***DNS*** (***Network*** group)	-	-	RW
Port	Port for broker	0…65535	1883	RW
Store last message	If ***On***, other clients subscribed to the module's topics will receive the latest messages from these topics.	***On*** / ***Off***	***Off***	RW
Publishing interval	Publishing interval in seconds	5…600	10	RW
Quality of service	***QoS0*** - at most once ***QoS1*** - at least once ***QoS2*** - exactly once	***QoS0*** / ***QoS1*** / ***QoS2***	***QoS0***	RW
Keep Alive interval	Keep Alive interval in seconds	0…600	0	RW
Status	Broker connection status	-	-	R

Table 4.10. Topics

Parameter	Topic	Node	Function	Format
Input bitmask	MASK	DI	GET	UINT
Pulse counter value	COUNTER	DI1…DI6	GET	UINT
New output bitmask	MASK	DO	SET	UINT
Output bitmask	STATE	DO	GET	UINT
Diagnostic bitmask	DIAGNOSTICS	DO	GET	UINT

Example 1:

Device – device name specified in akYtecToolPro

1. Read the bitmask of digital inputs
   MX210/Device/GET/DI/MASK
   Obtained value: 15 (HIGH on inputs 1-4)
2. Write the bitmask of digital outputs
   MX210/Device/SET/DO/MASK
   Recorded value: 15 (outputs 1-4 are on)
3. Single-level wildcard usage
   MX210/Device/GET/+/COUNTER
   Obtained value: counter values of all digital inputs. The topic is equivalent to the group of topics:

   MX210/Device/GET/DI1/COUNTER

MX210/Device/GET/DI2/COUNTER
MX210/Device/GET/…/COUNTER
MX210/Device/GET/DIn/COUNTER

4. Multi-level wildcard usage
   MX210/Device/GET/#
   Obtained value: all module parameters available for reading. The topic is equivalent to the group of topics:

   MX210/Device/GET/DI/MASK
   MX210/Device/GET/DI1/COUNTER
   MX210/Device/GET/DI2/COUNTER
   MX210/Device/GET/…/COUNTER
   MX210/Device/GET/DIn/COUNTER

For more information see document: NTP_MQTT_SNMP_protocols.

4.12 SNMP protocol

4.12.1 Basics

The protocol is based on the Client / Server architecture, where clients are called ***managers*** and servers are called ***agents***.

Managers can read (GET) and write (SET) agent parameters. Agents can send messages (***traps***) to managers about changes in any parameter.

Each agent parameter has a unique identifier (OID - object identifier), which is a sequence of numbers separated by periods.

4.12.2 Implementation

The module supports SNMP protocol (SNMPv1 and SNMPv2c versions) and can be used as agent with GET and SET requests.

All module parameters are available via SNMP protocol. The list of parameters is given in App. D.

NOTE
When using the SNMP protocol without GET requests, it is recommended to set the parameter "Safe state timeout" ("Modbus Slave" group) to 0, since writing is usually event-driven and not cyclic in this case.

Table 4.11. SNMP parameters

Parameter	Description	Range	Default value	Access
Enable	Enable SNMP connection	***On*** / ***Off***	***Off***	RW
Read community	Password for read access	-	***public***	RW
Write community	Password for write access	-	***private***	RW
Trap IP address	IP address to which the trap will be sent in case of changing the mask of the digital inputs (modules with digital inputs only)	-	10.2.4.78	RW
Trap port	Port number to which the trap will be sent	0…65535	162	RW
SNMP version	Protocol version	***SNMPv1*** / ***SNMPv2***	***SNMPv1***	RW

For more information see document: NTP_MQTT_SNMP_protocols.

4.13 Password

You can use password to protect the configuration parameters of the device from an unauthorized access.

To set the password, use the toolbar item ***Password*** *** or the same item in the device context menu. There is no password by default.

If you forgot the password, restore the factory settings (Sect. 6).

5. Installation

The safety requirements from the section 1.5 must be observed.

5.1 Mounting

The device is designed to be installed on DIN rail or using two screws on a mounting panel in an electric cabinet.

The operating conditions from the Sect. 3.2 must be considered when choosing the installation site.

Dimensional drawings are given in Appendix A. Only the vertical positioning of the device is allowed.

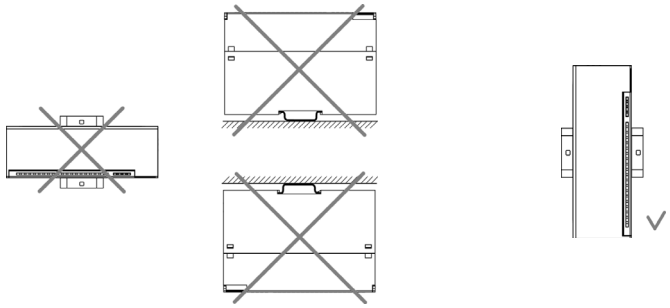

Fig. 5.1 DIN rail mounting

Device replacement (Fig. 5.2):

- switch off the power supply of the module and all connected devices
- open the front cover 1
- loosen the two screws 3
- remove the terminal block 2

Now you can replace the device.

Reverse this procedure after replacing the device.

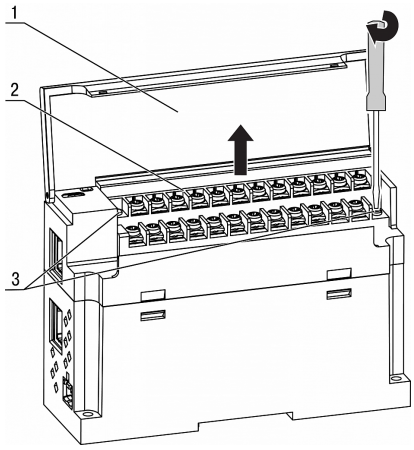

Fig. 5.2 Device replacement

5.2 Wiring

WARNING
The device must be powered off before connecting to other equipment or PC. Switch on the power supply only after the wiring of the device has been completed.

NOTICE
Ensure that the input signal is connected to the correct input terminals and that the input configuration corresponds to the signal. Non-observance can cause the device damage.

NOTE
To ensure compliance with the EMC requirements:

- ***Signal cables should be routed separately or screened from the supply cables.***
- ***Shielded cable should be used for the signal lines.***

5.2.1 General information

Power supply terminals and Ethernet interfaces are placed on the top of the device (Fig. 2.3. Pos. 1). Mating plug for the power supply is included.

Terminal assignments are given in Fig. 5.3 and Tab. 5.1.

Electrical connections for inputs and outputs are given in Fig. 5.4…5.6.

Maximum conductor cross-section is 1.0 mm².

Plug-in terminal block for power supply and removable terminal block for I/O connections enable quick and easy replacement of the device (see Fig. 5.2).

When wiring is completed, the wires should be placed in a special recess under the cover so that adjacent devices can be placed on the DIN rail close to each other.

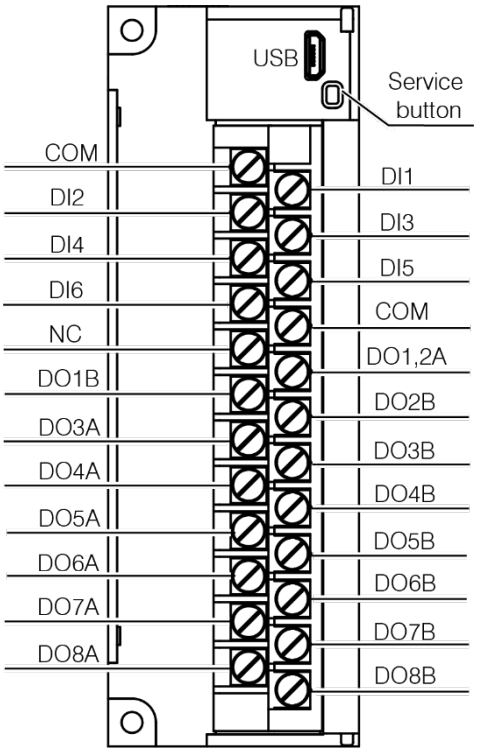

Fig. 5.3 Front view (open cover)

Table 5.1 Terminal assignments

Marking	Description
DI1…DI6	Input terminals
COM	Common input terminals
NC	Not connected
DO1,2A	Common terminal A for outputs 1, 2
DO3A…DO8A, DO1B…DO8B	Output terminals

NOTICE
Do not connect any wires to NC terminals.

5.2.2 Digital inputs

Two COM terminals are internally connected.

Total resistance of the connection lines with the closed sensor output shall not exceed 100 Ω.

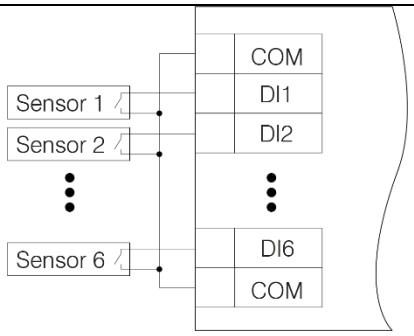

Fig. 5.4 Switch contact wiring

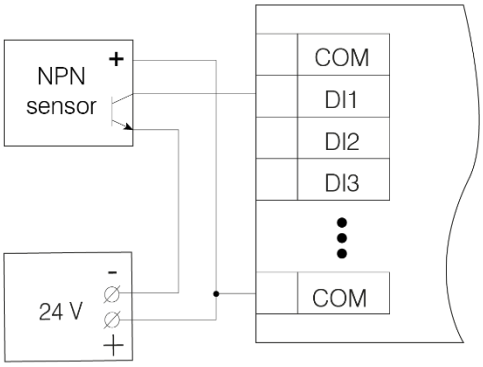

Fig. 5.5 3-wire sensor with NPN output

5.2.3 Digital outputs

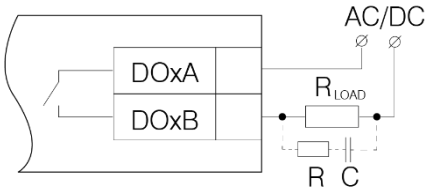

Fig. 5.6 Relay output wiring

NOTICE
When connecting inductive load, it is recommended to install an RC circuit in parallel with the load. It will suppress arcing and noise at switching.

5.2.4 Ethernet

The Ethernet connection can be established in a star or daisy chain topology (Fig. 5.7, 5.8).

It is recommended to seal the unused connector with a rubber plug (included).

Star topology:

- The maximum length of the network lines between modules is 100 m.
- Both Ethernet connectors can be used.

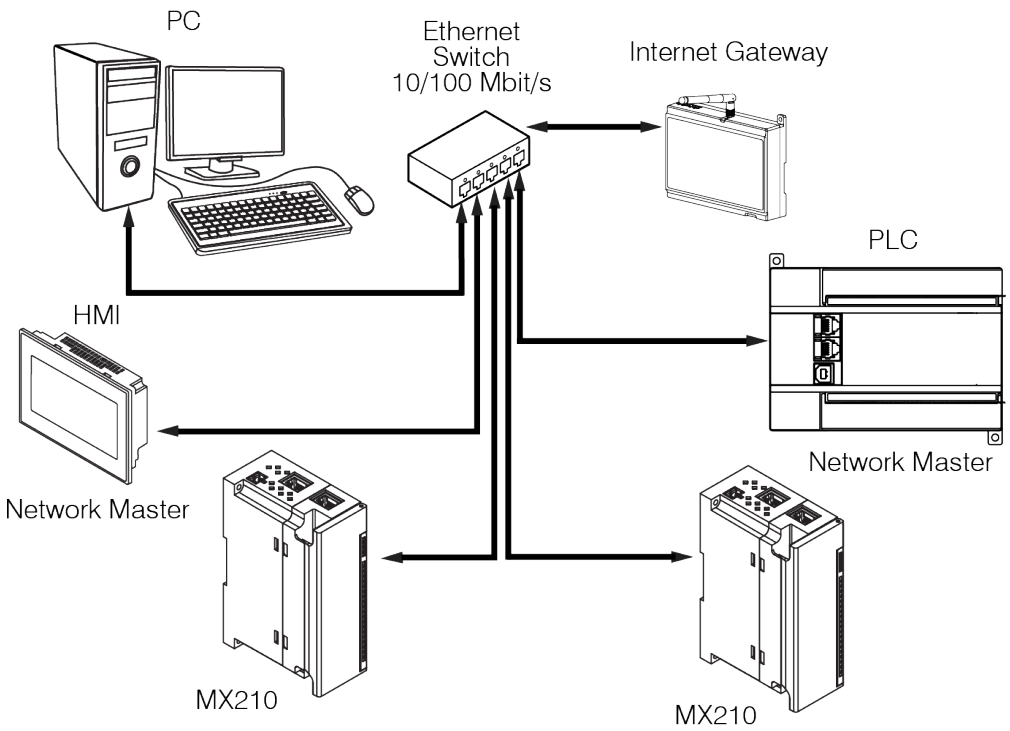

Fig. 5.7 Star topology

Chain topology:

- maximum section length is 100 m
- realized with two Ethernet connectors
- If the module fails (device error or power supply loss), the data is transferred directly from connector 1 to connector 2 (auto-bypass).

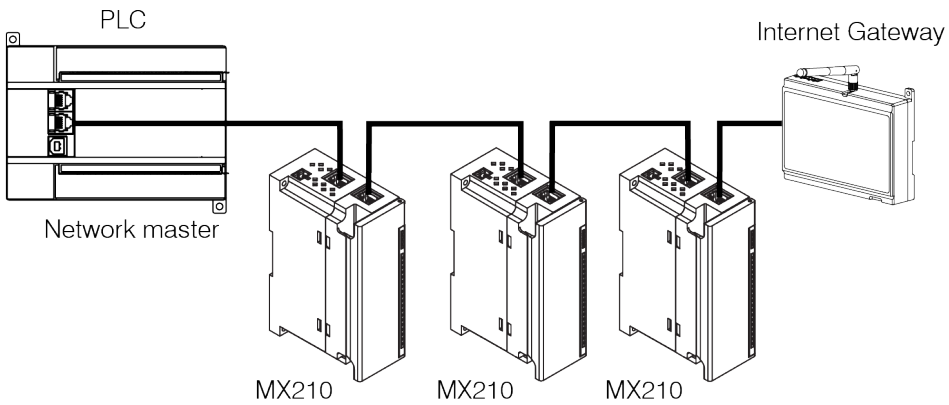

Fig. 5.8 Chain topology

6. Factory settings restoration

NOTE
After restoring the factory settings all parameters but Ethernet will be reset to default values and the password deleted. The Ethernet parameters will not be affected.

To restore the factory settings:

- Power on the device
- Open the front cover
- Using a thin tool, press and hold the service button (Fig. 2.2. Pos. 7) for at least 12 seconds
- Close the cover

The device will operate with the default parameters.

7. Maintenance

WARNING
Cut off all power before maintenance.

The maintenance includes:

- cleaning the case and terminal blocks from dust, dirt and debris
- checking the device fastening
- checking the wiring (connecting wires, terminal connections, absence of mechanical damages).

NOTICE
The device should be cleaned with a damp cloth only. No abrasives or solvent-containing cleaners may be used.

8. Transportation and storage

Pack the device in such a way as to protect it reliably against impact for storage and transportation. The original packaging provides optimum protection.

If the device is not taken immediately after delivery into operation, it must be carefully stored at a protected location. The device should not be stored in an atmosphere with chemically active substances.

The environmental conditions from the Sect. 3.2 must be considered during transportation and storage.

NOTICE
The device may have been damaged during transportation.
Check the device for transport damage and completeness!
Report the transport damage immediately to the shipper and akYtec GmbH.

9. Scope of delivery

– MK210-311	1
– Ethernet connection cable	1
– 2-pole plug-in terminal block	1
– Rubber plug	1
– Short guide	1

Appendix A. Dimensions

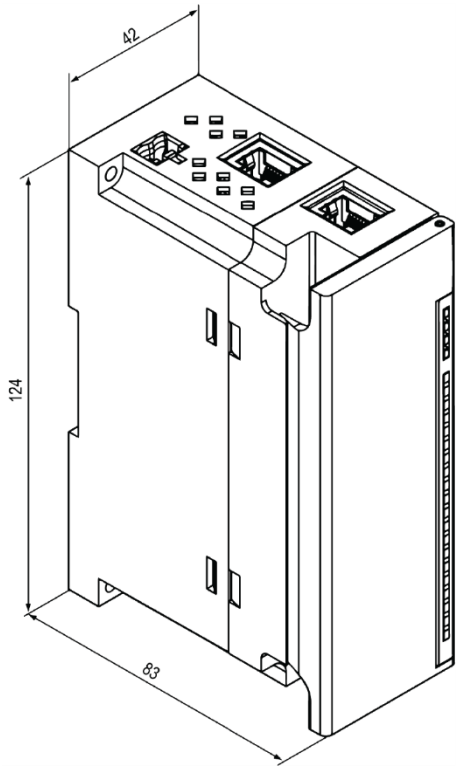

Fig. A.1 External dimensions

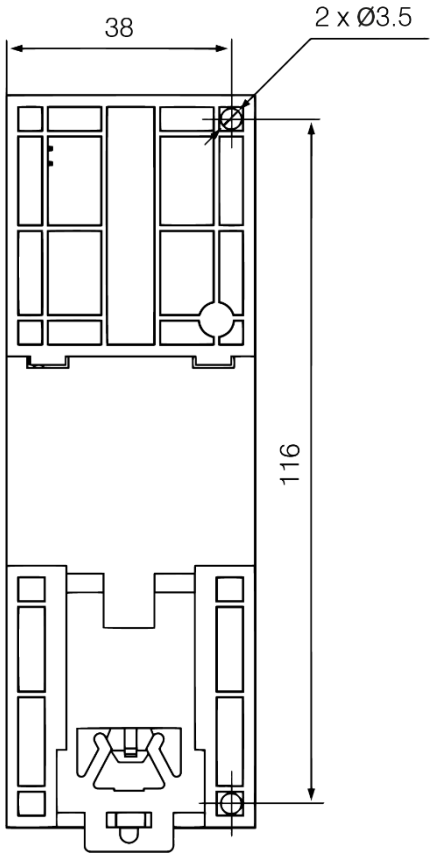

Fig. A.2 Wall mounting dimensions

Appendix B. Galvanic isolation

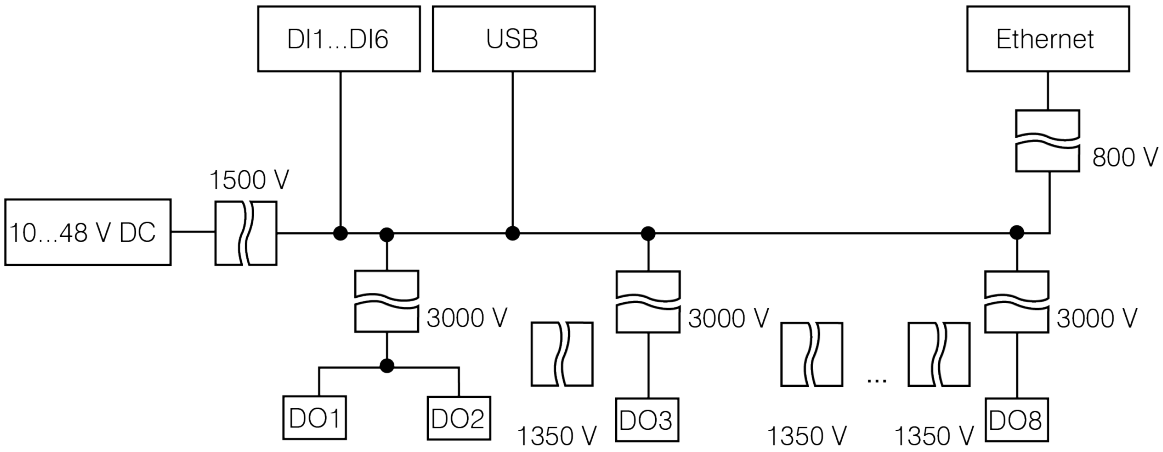

Fig. B.1 Galvanic isolation

The relay outputs have individual galvanic isolation except DO1 and DO2, which have a common terminal COM.

The test voltages shown in Fig. B.1 correspond to the tests carried out under normal operating conditions with 1 minute exposure time.

Appendix C. Battery replacement

To replace the battery, proceed as follows:

- power off the module and all connected devices
- remove the terminal blocks without disconnecting the connected wires (Fig. 5.2)
- remove the module from the DIN rail
- remove the front part of the case by opening the four side latches one-by-one using a flat screwdriver (Fig. C.1)
- replace the battery.

The replacement should not take longer than one minute. Otherwise, the real-time clock has to be adjusted anew.

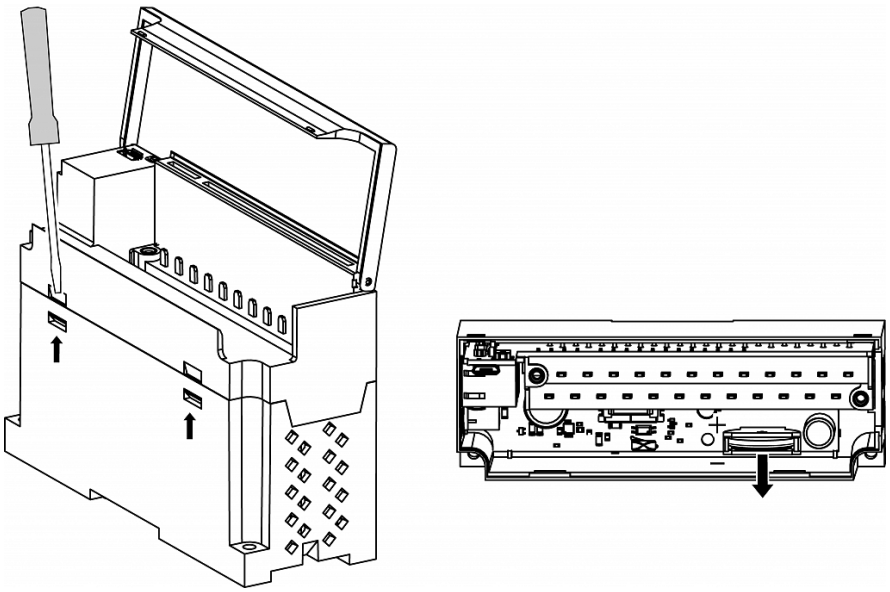

Fig. C.1 Battery replacement

Appendix D. Modbus application

Table D.1 – device parameters with register addresses

Table D.2 – used data types

Table D.3 – used Modbus functions

Table D.4 – possible data exchange errors

Table D.5 – function-specific errors

If an error occurs when receiving a request, the module sends a response to the Master with an error code.

If the request does not comply with the Modbus specification, it will be ignored.

Table D.1. Modbus registers

Parameter	Value	Unit	Access	Address		Data type
				hex	dec	
Device information						
Device name (dev)	-	-	R	0xF000	61440	String32
Firmware version (ver)	-	-	R	0xF010	61456	String32
Platform name	-	-	R	0xF020	61472	String32
Platform version	-	-	R	0xF030	61488	String32
Hardware version	-	-	R	0xF040	61504	String16
Additional text information	-	-	R	0xF048	61512	String16
S/N	-	-	R	0xF084	61572	String32
MAC address	-	-	R	0xF100	61696	UINT48
Real-time clock						
Time	-	s	R	0xF080	61568	DATETIME
Time zone	-	min	RW	0xF082	61570	TIMEZONE
Time (ms)	0…4294967295	ms	R	0xF07B	61563	UINT32
New time	-	s	RW	0xF07D	61565	DATETIME
Apply new time	0 - off / 1 - on	-	RW	0xF07F	61567	UINT16
Network / Ethernet						
IP address	-	-	R	0x001A	26	UINT32
Subnet mask	-	-	R	0x001C	28	UINT32
Gateway	-	-	R	0x001E	30	UINT32
DNS server 1	-	-	RW	0x000C	12	UINT32
DNS server 2	-	-	RW	0x000E	14	UINT32
New IP address	-	-	RW	0x0014	20	UINT32
New subnet mask	-	-	RW	0x0016	22	UINT32
New gateway	-	-	RW	0x0018	24	UINT32
DHCP	0 - off 1 - on 2 - service button	-	RW	0x0020	32	UINT16
Battery						
Voltage	0…3300	mV	R	0x0321	801	UINT16
Modbus Slave						
Safe state timeout	0…60	s	RW	0x2BC	700	UINT8
Device status						
Status	-		R	0xF0B4	61620	UINT32

Data logging						
Logging interval	10…3600	s	RW	0x0384	900	UINT16
Digital inputs / Single						
DI1 Debounce filter	0 - off / 1 - on	-	RW	0x0060	96	UINT16
…	…	…	…	…	…	…
DI6 Debounce filter	0 - off / 1 - on	.	RW	0x0065	101	UINT16
DI1 Pulse counter value	0...4294967295	-	R	0x00A0	160	UINT32
…	…	…	…	…	…	…
DI6 Pulse counter value	0...4294967295	-	R	0x00AA	170	UINT32
DI1 Reset value	0 - on / 1 - off	-	RW	0x00E0	224	UINT16
…	…	…	…	…	…	…
DI6 Reset value	0 - on / 1 - off	-	RW	0x00E5	229	UINT16
Digital inputs / Group						
Input bitmask	0…63	-	R	0x0033	51	UINT8
Digital outputs / Single						
DO1 Control mode	0 - on-off / 1 - PWM	-	RW	0x0110	272	UINT16
…	…	…	…	…	…	…
DO8 Control mode	0 - on-off / 1 - PWM	-	RW	0x0117	279	UINT16
DO1 PWM period	1000…60000	ms	RW	0x0134	308	UINT16
…	…	…	…	…	…	…
DO8 PWM period	1000…60000	ms	RW	0x013B	315	UINT16
DO1 PWM duty cycle	0…1000	‰	RW	0x0154	340	UINT16
…	…	…	…	…	…	…
DO8 PWM duty cycle	0…1000	‰	RW	0x015B	347	UINT16
DO1 Safe state	0…1000	‰	RW	0x01DA	474	UINT16
…	…	…	…	…	…	…
DO8 Safe state	0…1000	‰	RW	0x01E1	481	UINT16
DO1 Output diagnostic	0 - off / 1 - on	-	RW	0x01B4	436	UINT16
…	…	…	…	…	…	…
DO8 Output diagnostic	0 - off / 1 - on	-	RW	0x01BB	443	UINT16
Digital outputs / Group						
Output bitmask	0…255	-	R	0x01D4	468	UINT8
New output bitmask	0…255	…	RW	0x01D6	470	UINT8
Diagnostic bitmask	0…255	-	R	0x01D8	472	UINT8
NTP						
Enable	0 - off / 1 - on	-	RW	0x1600	5632	UINT16
NTP server pool	-	-	RW	0x1601	5633	String32
NTP server 1	-	-	RW	0x1641	5697	UINT32
NTP server 2	-	-	RW	0x1643	5699	UINT32
Synchronization period	5…65535	s	RW	0x1645	5701	UINT16
NTP status	0 - off 1 - on 2 - synchronized	-	RW	0x1646	5702	UINT16
MQTT						
Connect to broker	0 - off / 1 - on	-	RW	0x1700	5888	UINT16
User name	-	-	RW	0x1728	5928	String32
Password	-	-	RW	0x1748	5960	String32
Device name	-	-	RW	0x1708	5896	String32
Broker address	-	-	RW	0x1769	5993	String32

Port	0…65535	-	RW	0x1703	5891	UINT16
Store last message	0 - off / 1 - on	-	RW	0x1707	5895	UINT16
Publishing interval	5…600	s	RW	0x1704	5892	UINT16
Quality of service	0 - QoS0 1 - QoS1 2 - QoS2	-	RW	0x1705	5893	UINT16
Keep Alive	0…600	s	RW	0x1768	5992	UINT16
Status	0 - off 1 - on 2 - connection error	-	R	0x1789	6025	UINT16
Enable	0 - off / 1 - on	-	RW	0x178A	6026	UINT16
SNMP						
Enable	0 - off / 1 - on	-	RW	0x1400	5120	UINT16
Read community	-	-	RW	0x1771	6001	String32
Write community	-	-	RW	0x1781	6017	String32
Trap IP address	-	-	RW	0x1401	5121	UINT32
Trap port	0…65535	-	RW	0x1403	5123	UINT16
SNMP version	0 - SNMPv1 1 - SNMPv2	-	RW	0x1404	5124	UINT16

Table D.2. Data types

Data type	Size (registers)	Size (bytes)	Description
UINT8	1	1	Unsigned integer
UINT16	1	2	Unsigned integer
UINT32	2	4	Unsigned integer
UINT48	3	6	Unsigned integer
INT16	1	2	Signed integer
String16	8	16	String of 16 characters (Win-1251 code page)
String32	16	32	String of 32 characters (Win-1251 code page)
DATETIME	2	4	UINT32, Time in seconds, starting from 01/01/2000, 00:00
TIMEZONE	1	2	INT16, difference between UTC and local time in minutes

Table D.3. Modbus functions

Code	Name	Description
03 (0x03)	Read Holding Registers	Read the contents of a contiguous block of holding registers
04 (0x04)	Read Input Registers	Read from 1 to 125 contiguous input registers
06 (0x06)	Write Single Register	Write a single holding register
16 (0x10)	Write Multiple Registers	Write a block of contiguous registers (1 to 123 registers)
20 (0x14)	Read File Record	Read file as a set of records
21 (0x15)	Write File Record	Write file as a set of records

Table D.4. Modbus error codes

Code	Name	Description
01	Illegal Function	The received function code is not recognized or accepted by slave
02	Illegal Data Address	Data address of some or all the required entities are not allowed or do not exist in slave
03	Illegal Data Value	Value is not accepted by slave
04	Slave Device Failure	Unrecoverable error occurred while slave was attempting to perform requested action

Table D.5. Function-specific errors

Function code	Error code	Possible error causes
03	02	Number of requested registers is greater than the maximum possible (125)
		Nonexistent parameter requested

04	02	Number of requested registers is greater than the maximum possible (125)
		Nonexistent parameter requested
06	02	An attempt to write a parameter longer than 2 bytes
		An attempt to write a read-only parameter
		An attempt to write a parameter of a type not supported by this function. Supported types: – INT, UINT, max. 2 bytes – enumerated – REAL16
		Nonexistent parameter requested
	03	Parameter value is beyond the valid limits
16	02	Nonexistent parameter requested
		An attempt to write a read-only parameter
		Number of requested registers is greater than the maximum possible (123)
	03	No termination character (\0) in string parameter
		Size of the requested data is less than the size of the first or last parameter in the request
		Parameter value is beyond the valid limits
20	01	Invalid data size (valid range 0x07…0xF5)
	02	Not specified reference type
		Failed to open the file for reading (may be nonexistent)
	03	Failed to move to the desired offset in the file
	04	Error while deleting file on delete request
		Too much data requested (more than 250 bytes)
		Invalid record number (greater than 0x270F)
		Invalid record length (greater than 0x7A)
21	01	Invalid data size (valid range 0x09...0xFB)
	02	Not specified reference type
		Failed to open the file for writing
	04	Nonexistent file requested
		Read-only file requested
		Failed to write the required number of bytes